D1RFRD006

REVISION RECORD				
REV	ECO	DESCRIPTION	DRFT	CHKD

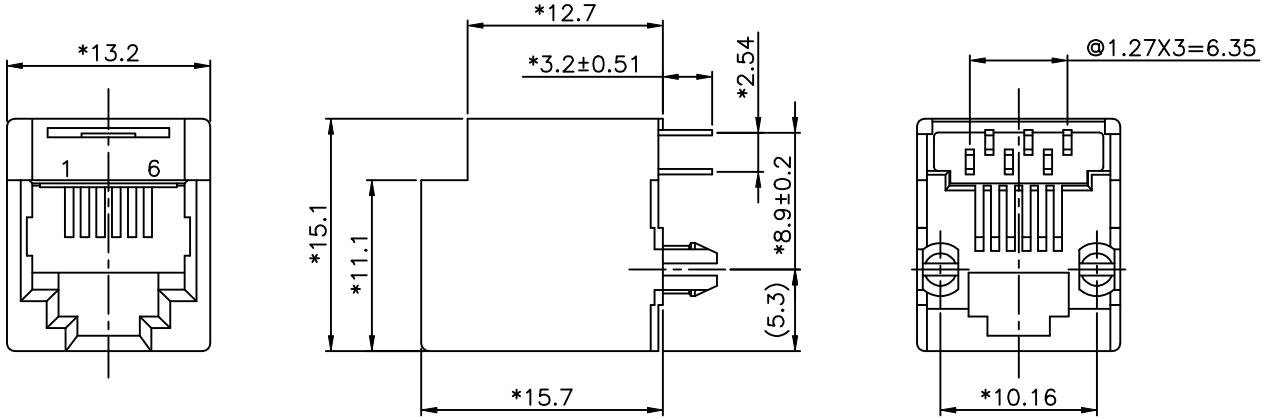

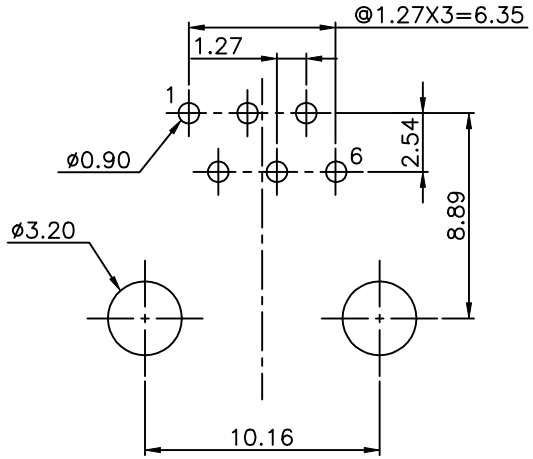

RECOMMENDED HOLE PATTERN
(COMPONENT SIDE VIEW)

NOTES:

ELECTRICAL:

1. VOLTAGE RATING: 125 VAC RMS .
2. CURRENT. RATING: 1.5 AMP .
3. CONTACT RESISTANCE: 30 MILLIOHMS MAX.
4. INSULATION RESISTANCE: 1000 MEGOHMS MIN @ 500 VDC.
5. DIELECTRIC STRENGTH: 1000 VAC RMS 60Hz, 1MIN.

MECHANICAL:

1. HOUSINGE MATERIAL :NYLON+30%.G.F(FR52)UL94V-0.
2. CONTACT MATERIAL: PHOSPHOR BRONZE. t=0.35mm
3. PLATING: GOLD PLATING OVER NICKEL.
4. OPERATING LIFE: 750 CYCLES MIN.
5. PCB RETENTION PRE-SOLDER: 1 LB MIN.
6. PCB RETENTION POST-SOLDER: 10 LBS MIN.

ENVIRONMENTAL:

1. STORAGE: -40°C TO +85°C.
2. OPERATION: -40°C TO +85°C.
3. WAVE SOLDER TEMPERTURE: 255°C TO 265°C 5~10 SECOND.

PART NUMBER: E526X-700B4X-L

2- 2CONTACTS
4- 4CONTACTS
6- 6CONTACTS

1- 3u" 2- 6u" 3-15u"
4-30u" 5-50u"

MM (INCH)	DFTO ANKUE	DATE 4/21/05	FULL RISE ELECTRONIC CO., LTD
TOLERANCES EXCEPT AS NOTED	CHKD SAMMY	DATE 2005/4/23	
MM .0 ±0.20 ± .00 ±0.15 ± .000 ±0.075 ±	MFO	DATE	TITLE
	APPV LLUSHENG	DATE 2005/4/23	TOP ENTRY PCB JACK (DIP TYPE)
	MATERIAL :		
ANGLES ±	QT'Y :		DRAWING NO. GE523030-LA / PART NO. SEE NOTE — SIZE A3 — REV 0
THIRD ANGLE PROJECTION	FINISH :		
DETACHED LISTS	SCALE :		DO NOT SCALE DRAWING — SHEET X OF Y